PREMIER 170 PART SCHEMATIC

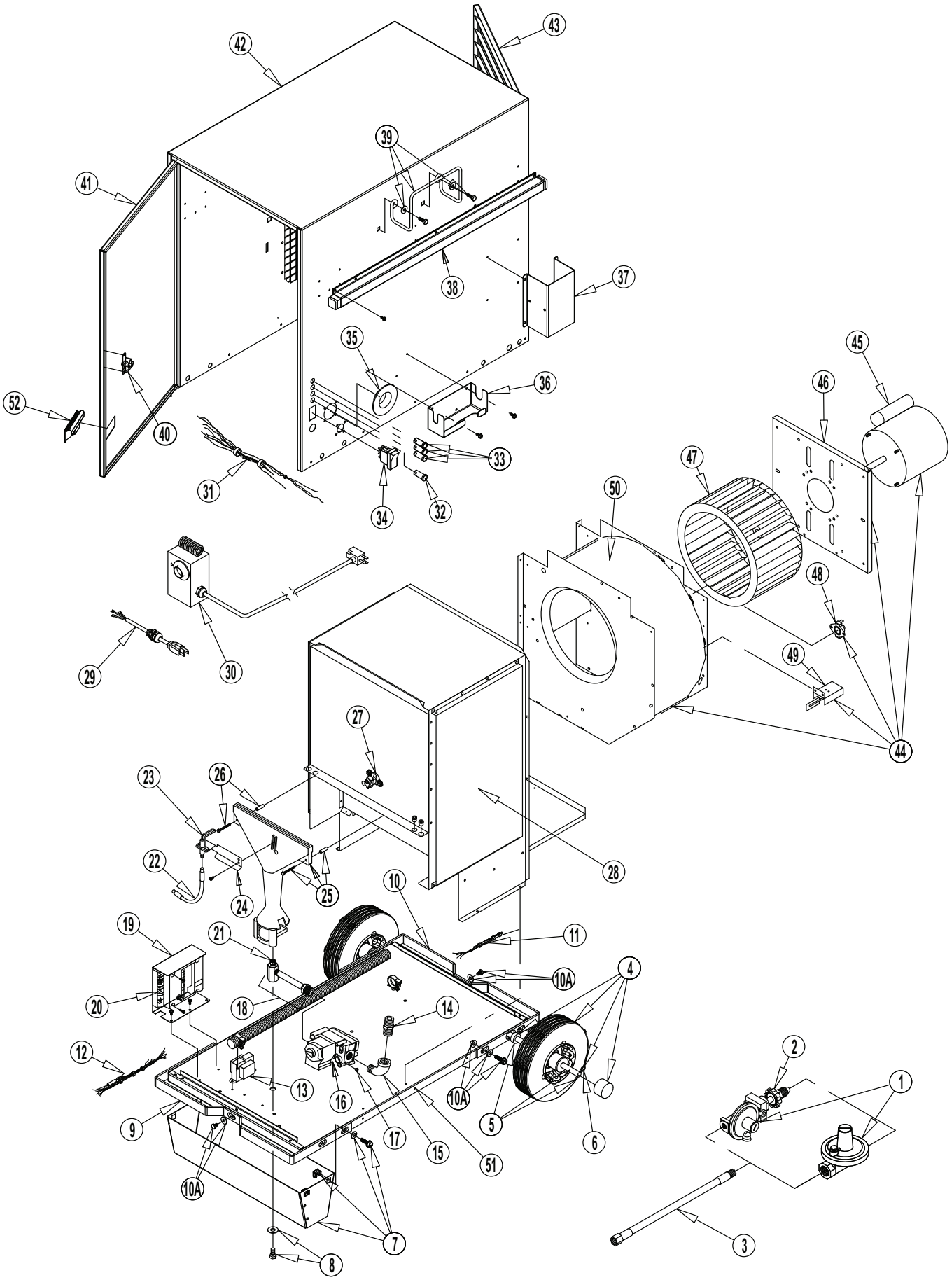

Item	Description		Part Number
1	Regulator	Propane Gas	26419
		Natural Gas	09795
2	Hand Wheel with Spring	Propane Gas	26395
3	Universal Hose Kit, 15 ft. Hose w/ Adapters		24600
4	Wheel Kit		26418
5	Axle		26415
6	Cotter Pin		26417
7	Kit, Leg Bracket		26413
8	Bolt and Washer		25866
9	Handle, Bracket, Burner End		26426
10	Handle, Bracket, Motor End		26427
10A	Nut, Bolt & Washer		26443
11	Wire Harness, Motor End		26406
12	Wire Harness, Burner and Gas Control End		26407
13	Transformer		26412
14	Adapter,Hose, 1/2 NPT x 5/8-18	Propane Gas	06655
		Natural Gas	25873
15	Ell		09309
16	Valve, Gas Control	Propane Gas	22076
		Natural Gas	22078
17	Screw		09425
18	Manifold Assembly with Orifice	Propane Gas	26404
		Natural gas	26441
19	Bracket, Ignition Control		26410
20	Ignition Control		25865
21	Orifice	Propane Gas	21573
		Natural gas	09787
22	Wire, Igniter		25840
23	Igniter		25841
24	Bracket, Igniter		25843
25	Burner with Mounting Hardware		25842
26	Burner Mounting Hardware		571211
27	Switch, High Limit, Burner End (275°F)		25869
28	Chamber, Heat		26403
29	Cord, Power		26379
30	Thermostat Kit w/ 20 ft. Cord		09454
31	Wire Harness, Status Lights		26408
32	Light,Status, 120 Volt		26393
33	Light,Status, 24 Volt		26392
34	Switch, Heat/Vent, Rocker		26385
35	Plug		25747
36	Bracket, Regulator Storage		26402
37	Bracket, Thermosat Storage		26401
38	Handle, Sliding		571760
39	Hanger, Hose		571619
40	Latch, Door		26437
41	Door, Burner End	Propane gas	26432
		Natural Gas	26431
42	Case Assembly	Propane Gas	26398
		Natural Gas	26397
43	Door, Louvered, Motor End		26430
44	Housing Assembly w/ Motor, Fan, High Limit and Air Proving Switches		26439

(Continued on page 34)

PREMIER 170 PARTS LIST (Continued)

Item	Description	Part Number
45	Motor	25834
46	Mount, Motor	25835
47	Fan	25849
48	Switch, High Limit, Motor End (190°F)	25846
49	Switch, Air Proving	25858
50	Housing, Fan	26440
51	Base	26414
52	Handle,Door	26479

Warranty Policy

EQUIPMENT

L.B. White Co., Inc. warrants that the component parts of its heater are free from defects in material and workmanship, when properly installed, operated, and maintained in accordance with the Owner's Manual safety guides and labels contained with each unit. If, **within 12 months from the date of purchase by the end user**, any component is found to be defective, L.B. White Co., Inc. will at its option, repair or replace the defective part or heater, with a new part or heater, F.O.B., Onalaska, Wisconsin.

A warranty card on file at L.B. White will automatically qualify the heater and its component parts for warranty consideration. If a warranty card is not on file, a copy of the bill of sale will be required to establish warranty qualification. If neither is available, the warranty period will be 12 months from date of shipment from L B. White.

PARTS

L.B. White Co., Inc. warrants that replacement parts purchased from the company and used on the appropriate L. B. White heater are free from defects both in material and workmanship for **12 months from the date of purchase by the end user**. Warranty is automatic if a component is found defective within 12 months of the date code marked on the part. If the defect occurs more than 12 months later than the date code but within 12 months from the date of purchase by the end user, a copy of a bill of sale will be required to establish warranty qualification.

The warranty set forth above is the exclusive warranty provided by L.B. White, and all other warranties, including any implied warranties or merchantability or fitness for a particular purpose, are expressly disclaimed. In the event any implied warranty is not hereby effectively disclaimed due to operation of law, such implied warranty is limited in duration to the duration of the applicable warranty stated above. The remedies set forth above are the sole and exclusive remedies available hereunder. L.B. White will not be liable for any incidental or consequential damages directly or indirectly related to the sale, handling or use of the heater, and in any event L.B. White's liability in connection with the heater, including for claims based on negligence or strict liability, is limited to the purchase price.

Some states do not allow limitations on how long an implied warranty lasts, so the above limitation may not apply to you. Some states do not allow the exclusion or limitation of incidental or consequential damages, so the above limitation or exclusion may not apply to you. This warranty gives you specific legal rights, and you may also have other rights which vary from state to state.

Replacement Parts and Service

Contact your local L.B. White dealer for replacement parts and service or call the L.B. White Co., Inc. at (800) 345-7200 for assistance. Be sure that you have your heater model number and configuration number when calling.